LM613

LM613 Dual Operational Amplifiers, Dual Comparators, and Adjustable Reference

Literature Number: SNOSC11A

National Semiconductor

August 2000

LM613
Dual Operational Amplifiers, Dual Comparators, and Adjustable Reference

General Description

The LM613 consists of dual op-amps, dual comparators, and a programmable voltage reference in a 16-pin package. The op-amps out-performs most single-supply op-amps by providing higher speed and bandwidth along with low supply current. This device was specifically designed to lower cost and board space requirements in transducer, test, measurement, and data acquisition systems.

Combining a stable voltage reference with wide output swing op-amps makes the LM613 ideal for single supply transducers, signal conditioning and bridge driving where large common-mode-signals are common. The voltage reference consists of a reliable band-gap design that maintains low dynamic output impedance (1Ω typical), excellent initial tolerance (0.6%), and the ability to be programmed from 1.2V to 6.3V via two external resistors. The voltage reference is very stable even when driving large capacitive loads, as are commonly encountered in CMOS data acquisition systems.

As a member of National's Super-Block™ family, the LM613 is a space-saving monolithic alternative to a multi-chip solution, offering a high level of integration without sacrificing performance.

Features

OP AMP

- Low operating current (Op Amp): 300 μA
- Wide supply voltage range: 4V to 36V
- Wide common-mode range: V^- to (V^+ – 1.8V)
- Wide differential input voltage: ±36V
- Available in plastic package rated for Military Temp. Range Operation

REFERENCE

- Adjustable output voltage: 1.2V to 6.3V
- Tight initial tolerance available: ±0.6%
- Wide operating current range: 17 μA to 20 mA
- Tolerant of load capacitance

Applications

- Transducer bridge driver
- Process and mass flow control systems
- Power supply voltage monitor
- Buffered voltage references for A/D's

Connection Diagrams

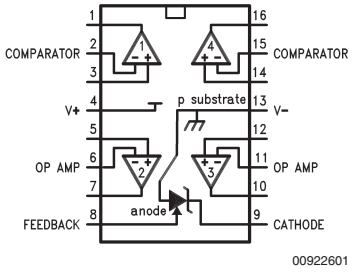

Top View

E Package Pinout

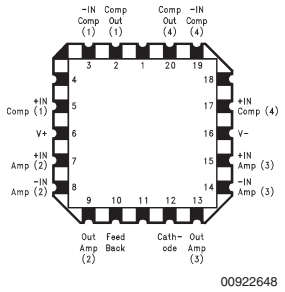

Ultra Low Noise, 10.00V Reference.
Total output noise is typically 14 μV_{RMS}.

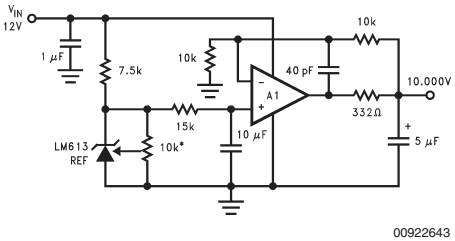

*10k must be low t.c. trimpot

Super-Block™ is a trademark of National Semiconductor Corporation.

© 2004 National Semiconductor Corporation

Absolute Maximum Ratings (Note 1)

If Military/Aerospace specified devices are required, please contact the National Semiconductor Sales Office/ Distributors for availability and specifications.

Voltage on Any Pin Except V_R (referred to V^-pin)	
(Note 2)	36V (Max)
(Note 3)	−0.3V (Min)
Current through Any Input Pin & V_R Pin	±20 mA
Differential Input Voltage	
Military and Industrial	±36V
Commercial	±32V
Storage Temperature Range	$-65^\circ C \le T_J \le +150^\circ C$
Maximum Junction Temp.(Note 4)	150˚C
Thermal Resistance, Junction-to-Ambient (Note 5)	
N Package	100˚C/W
WM Package	150˚C/W
Soldering Information (10 Sec.)	
N Package	260˚C
WM Package	220˚C
ESD Tolerance (Note 6)	±1 kV

Operating Temperature Range

LM613AI, LM613BI:	−40˚C to +85˚C
LM613AM, LM613M:	−55˚C to +125˚C
LM613C:	$0^\circ C \le T_J \le +70^\circ C$

Electrical Characteristics

These specifications apply for $V^- = GND = 0V$, $V^+ = 5V$, $V_{CM} = V_{OUT} = 2.5V$, $I_R = 100\ \mu A$, FEEDBACK pin shorted to GND, unless otherwise specified. Limits in standard typeface are for $T_J = 25^\circ C$; limits in **boldface type** apply over the **Operating Temperature Range**.

Symbol	Parameter	Conditions	Typical (Note 7)	LM613AM LM613AI Limits (Note 8)	LM613M LM613I LM613C Limits (Note 8)	Units
I_S	Total Supply Current	$R_{LOAD} = \infty$,	450	940	1000	μA (Max)
		$4V \le V^+ \le 36V$ (32V for LM613C)	**550**	**1000**	**1070**	μA (Max)
V_S	Supply Voltage Range		2.2	2.8	2.8	V (Min)
			2.9	**3**	**3**	V (Min)
			46	36	32	V (Max)
			43	**36**	**32**	V (Max)
OPERATIONAL AMPLIFIERS						
V_{OS1}	V_{OS} Over Supply	$4V \le V^+ \le 36V$	1.5	3.5	5.0	mV (Max)
		($4V \le V^+ \le 32V$ for LM613C)	**2.0**	**6.0**	**7.0**	mV (Max)
V_{OS2}	V_{OS} Over V_{CM}	V_{CM} = 0V through V_{CM} =	1.0	3.5	5.0	mV (Max)
		($V^+ - 1.8V$), $V^+ = 30V$, $V^- = 0V$	**1.5**	**6.0**	**7.0**	mV (Max)
$\frac{V_{OS3}}{\Delta T}$	Average V_{OS} Drift	(Note 8)	**15**			μV/˚C (Max)
I_B	Input Bias Current		10	25	35	nA (Max)
			11	**30**	**40**	nA (Max)
I_{OS}	Input Offset Current		0.2	4	4	nA (Max)
			0.3	**5**	**5**	nA (Max)
$\frac{I_{OS1}}{\Delta T}$	Average Offset Current		**4**			pA/˚C
R_{IN}	Input Resistance	Differential	1000			MΩ
C_{IN}	Input Capacitance	Common-Mode	6			pF
e_n	Voltage Noise	f = 100 Hz, Input Referred	74			$nV/\sqrt{Hz}$
I_n	Current Noise	f = 100 Hz, Input Referred	58			$fA/\sqrt{Hz}$
CMRR	Common-Mode	$V^+ = 30V$, $0V \le V_{CM} \le (V^+ - 1.8V)$	95	80	75	dB (Min)
	Rejection Ratio	CMRR = 20 log ($\Delta V_{CM}/\Delta V_{OS}$)	**90**	**75**	**70**	dB (Min)

Electrical Characteristics (Continued)

These specifications apply for V^- = GND = 0V, V^+ = 5V, V_{CM} = V_{OUT} = 2.5V, I_R = 100 µA, FEEDBACK pin shorted to GND, unless otherwise specified. Limits in standard typeface are for T_J = 25˚C; limits in **boldface type** apply over the **Operating Temperature Range**.

Symbol	Parameter	Conditions	Typical (Note 7)	LM613AM LM613AI Limits (Note 8)	LM613M LM613I LM613C Limits (Note 8)	Units
OPERATIONAL AMPLIFIERS						
PSRR	Power Supply Rejection Ratio	4V ≤ V^+ ≤ 30V, V_{CM} = V^+/2, PSRR = 20 log ($\Delta V^+/V_{OS}$)	110 **100**	80 **75**	75 **70**	dB (Min) dB (Min)
A_V	Open Loop Voltage Gain	R_L = 10 kΩ to GND, V^+ = 30V, 5V ≤ V_{OUT} ≤ 25V	500 **50**	100 **40**	94 **40**	V/mV (Min)
SR	Slew Rate	V^+ = 30V (Note 9)	0.70 **0.65**	0.55 **0.45**	0.50 **0.45**	V/µs
GBW	Gain Bandwidth	C_L = 50 pF	0.8 **0.5**			MHz MHz
V_{O1}	Output Voltage Swing High	R_L = 10 kΩ to GND, V^+ = 36V (32V for LM613C)	V^+ – 1.4 **V^+ – 1.6**	V^+ – 1.7 **V^+ – 1.9**	V^+ – 1.8 **V^+ – 1.9**	V (Min) V (Min)
V_{O2}	Output Voltage Swing Low	R_L = 10 kΩ to V^+, V^+ = 36V (32V for LM613C)	V^- + 0.8 **V^- + 0.9**	V^- + 0.9 **V^- + 1.0**	V^- + 0.95 **V^- + 1.0**	V (Max) V (Max)
I_{OUT}	Output Source Current	V_{OUT} = 2.5V, V^+_{IN} = 0V, V^-_{IN} = –0.3V	25 **15**	20 **13**	16 **13**	mA (Min) mA (Min)
I_{SINK}	Output Sink Current	V_{OUT} = 1.6V, V^+_{IN} = 0V, V^-_{IN} = 0.3V	17 **9**	14 **8**	13 **8**	mA (Min) mA (Min)
I_{SHORT}	Short Circuit Current	V_{OUT} = 0V, V^+_{IN} = 3V, V^-_{IN} = 2V	30 **40**	50 **60**	50 **60**	mA (Max) mA (Max)
		V_{OUT} = 5V, V^+_{IN} = 2V, V^-_{IN} = 3V	30 **32**	60 **80**	70 **90**	mA (Max) mA (Max)
COMPARATORS						
V_{OS}	Offset Voltage	4V ≤ V^+ ≤ 36V (32V for LM613C), R_L = 15 kΩ	1.0 **2.0**	3.0 **6.0**	5.0 **7.0**	mV (Max) mV (Max)
$\frac{V_{OS}}{V_{CM}}$	Offset Voltage over V_{CM}	0V ≤ V_{CM} ≤ 36V V^+ = 36V, (32V for LM613C)	1.0 **1.5**	3.0 **6.0**	5.0 **7.0**	mV (Max) mV (Max)
$\frac{V_{OS}}{\Delta T}$	Average Offset Voltage Drift		**15**			µV/˚C (Max)
I_B	Input Bias Current		5 **8**	25 **30**	35 **40**	nA (Max) nA (Max)
I_{OS}	Input Offset Current		0.2 **0.3**	4 **5**	4 **5**	nA (Max) nA (Max)
A_V	Voltage Gain	R_L = 10 kΩ to 36V (32V for LM613C) 2V ≤ V_{OUT} ≤ 27V	500 **100**			V/mV V/mV
t_r	Large Signal Response Time	V^+_{IN} = 1.4V, V^-_{IN} = TTL Swing, R_L = 5.1 kΩ	1.5 **2.0**			µs µs
I_{SINK}	Output Sink Current	V^+_{IN} = 0V, V^-_{IN} = 1V, V_{OUT} = 1.5V	20 **13**	10 **8**	10 **8**	mA (Min) mA (Min)
		V_{OUT} = 0.4V	2.8 **2.4**	1.0 **0.5**	0.8 **0.5**	mA (Min) mA (Min)

Electrical Characteristics (Continued)

These specifications apply for V^- = GND = 0V, V^+ = 5V, V_{CM} = V_{OUT} = 2.5V, I_R = 100 μA, FEEDBACK pin shorted to GND, unless otherwise specified. Limits in standard typeface are for T_J = 25˚C; limits in **boldface type** apply over the **Operating Temperature Range**.

Symbol	Parameter	Conditions	Typical (Note 7)	LM613AM LM613AI Limits (Note 8)	LM613M LM613I LM613C Limits (Note 8)	Units
COMPARATORS						
I_{LEAK}	Output Leakage Current	V^+_{IN} = 1V, V^-_{IN} = 0V, V_{OUT} = 36V (32V for LM613C)	0.1 **0.2**	10	10	μA (Max) μA (Max)
VOLTAGE REFERENCE						
V_R	Voltage Reference	(Note 10)	1.244	1.2365 1.2515 (±0.6%)	1.2191 1.2689 (±2%)	V (Min) V (Max)
$\frac{\Delta V_R}{\Delta T}$	Average Temp. Drift	(Note 11)	**10**	**80**	**150**	ppm/˚C (Max)
$\frac{\Delta V_R}{\Delta T_J}$	Hysteresis	(Note 12)	**3.2**			μV/˚C
$\frac{\Delta V_R}{\Delta I_R}$	V_R Change with Current	$V_{R(100\ \mu A)} - V_{R(17\ \mu A)}$	0.05 **0.1**	1 **1.1**	1 **1.1**	mV (Max) mV (Max)
		$V_{R(10\ mA)} - V_{R(100\ \mu A)}$ (Note 13)	1.5 **2.0**	5 **5.5**	5 **5.5**	mV (Max) mV (Max)
R	Resistance	$\Delta V_{R(10 \rightarrow 0.1\ mA)}$/9.9 mA $\Delta V_{R(100 \rightarrow 17\ \mu A)}$/83 μA	**0.2** **0.6**	**0.56** **13**	**0.56** **13**	Ω (Max) Ω (Max)
$\frac{V_R}{\Delta V_{RO}}$	V_R Change with High V_{RO}	$V_{R(Vro = Vr)} - V_{R(Vro = 6.3V)}$ (5.06V between Anode and FEEDBACK)	2.5 **2.8**	7 **10**	7 **10**	mV (Max) mV (Max)
$\frac{V_R}{\Delta V^+}$	V_R Change with V_{ANODE} Change	$V_{R(V+ = 5V)} - V_{R(V+ = 36V)}$ (V^+ = 32V for LM613C)	0.1 **0.1**	1.2 **1.3**	1.2 **1.3**	mV (Max) mV (Max)
		$V_{R(V+ = 5V)} - V_{R(V+ = 3V)}$	0.01 **0.01**	1 **1.5**	1 **1.5**	mV (Max) mV (Max)
I_{FB}	FEEDBACK Bias Current	$V_{ANODE} \leq V_{FB} \leq 5.06V$	22 **29**	35 **40**	50 **55**	nA (Max) nA (Max)
e_n	V_R Noise	10 Hz to 10 kHz, $V_{RO} = V_R$	30			μV_{RMS}

Electrical Characteristics (Continued)

Note 1: Absolute maximum ratings indicate limits beyond which damage to the component may occur. Electrical specifications do not apply when operating the device beyond its rated operating conditions.

Note 2: Input voltage above V^+ is allowed. As long as one input pin voltage remains inside the common-mode range, the comparator will deliver the correct output.

Note 3: More accurately, it is excessive current flow, with resulting excess heating, that limits the voltages on all pins. When any pin is pulled a diode drop below V^-, a parasitic NPN transistor turns ON. No latch-up will occur as long as the current through that pin remains below the Maximum Rating. Operation is undefined and unpredictable when any parasitic diode or transistor is conducting.

Note 4: Simultaneous short-circuit of multiple comparators while using high supply voltages may force junction temperature above maximum, and thus should not be continuous.

Note 5: Junction temperature may be calculated using $T_J = T_A + P_D\,\theta_{JA}$. The given thermal resistance is worst-case for packages in sockets in still air. For packages soldered to copper-clad board with dissipation from one comparator or reference output transistor, nominal θ_{JA} is 90˚C/W for the N package, and 135˚C/W for the WM package.

Note 6: Human body model, 100 pF discharged through a 1.5 kΩ resistor.

Note 7: Typical values in standard typeface are for T_J = 25˚C; values in **bold face type** apply for the full operating temperature range. These values represent the most likely parametric norm.

Note 8: All limits are guaranteed at room temperature (standard type face) or at operating temperature extremes **(bold type face)**.

Note 9: Slew rate is measured with the op amp in a voltage follower configuration. For rising slew rate, the input voltage is driven from 5V to 25V, and the output voltage transition is sampled at 10V and @ 20V. For falling slew rate, the input voltage is driven from 25V to 5V, and the output voltage transition is sampled at 20V and 10V.

Note 10: V_R is the Cathode-to-feedback voltage, nominally 1.244V.

Note 11: Average reference drift is calculated from the measurement of the reference voltage at 25˚C and at the temperature extremes. The drift, in ppm/˚C, is $10^6 \bullet \Delta V_R/(V_{R[25^\circ C]} \bullet \Delta T_J)$, where ΔV_R is the lowest value subtracted from the highest, $V_{R[25^\circ C]}$ is the value at 25˚C, and ΔT_J is the temperature range. This parameter is guaranteed by design and sample testing.

Note 12: Hysteresis is the change in V_R caused by a change in T_J, after the reference has been “dehysterized”. To dehysterize the reference; that is minimize the hysteresis to the typical value, its junction temperature should be cycled in the following pattern, spiraling in toward 25˚C: 25˚C, 85˚C, –40˚C, 70˚C, 0˚C, 25˚C.

Note 13: Low contact resistance is required for accurate measurement.

Simplified Schematic Diagrams

Op Amp

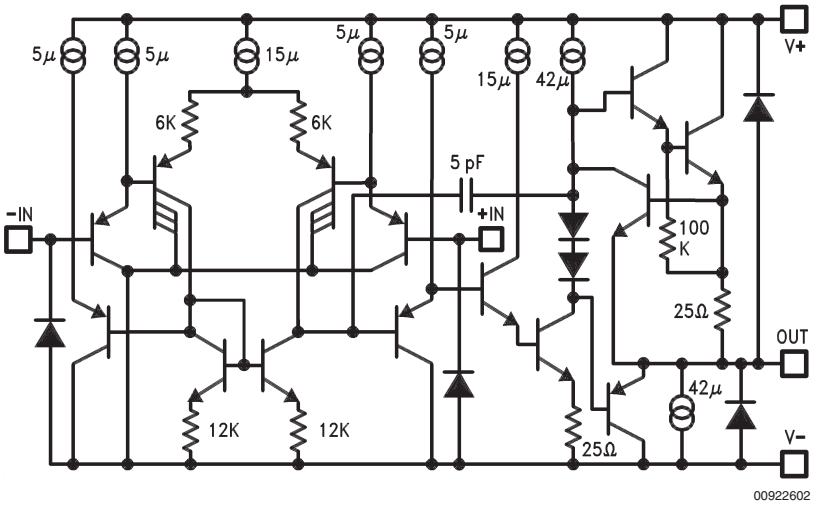

Comparator

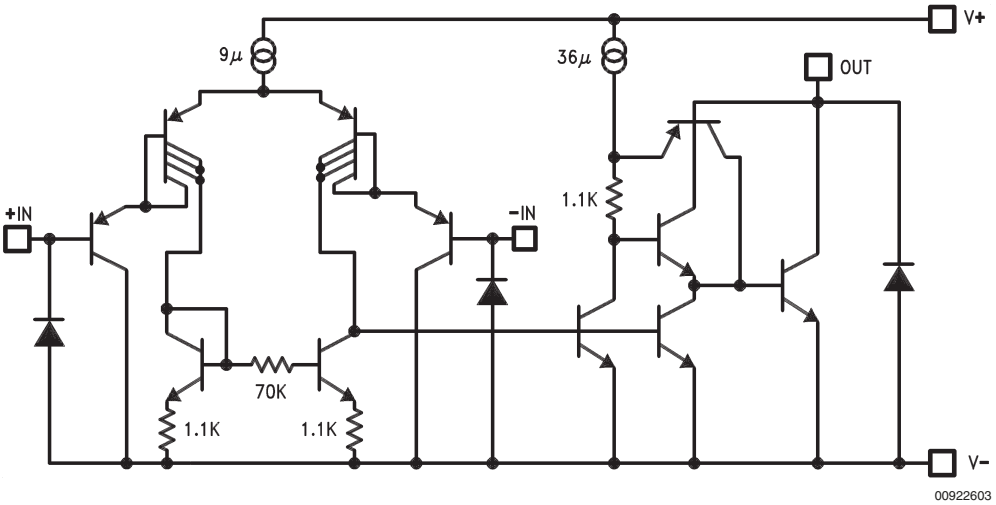

Reference/Bias

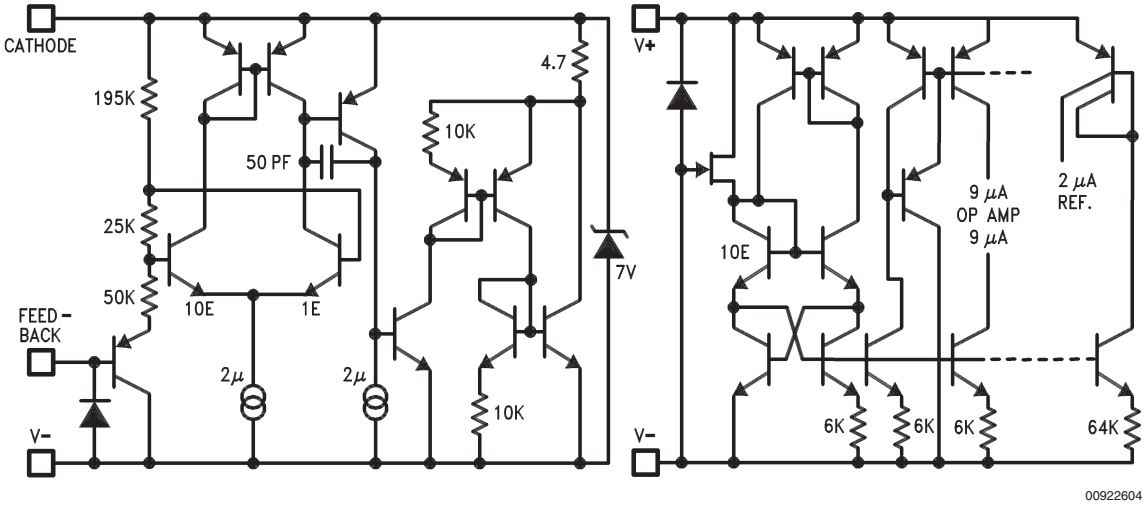

Typical Performance Characteristics (Reference)

T_J = 25˚C, FEEDBACK pin shorted to V^- = 0V, unless otherwise noted

Reference Voltage vs Temp.

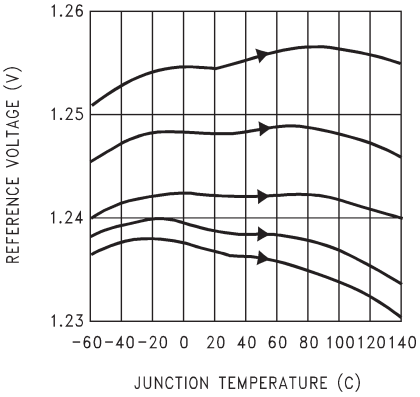

00922649

Reference Voltage Drift

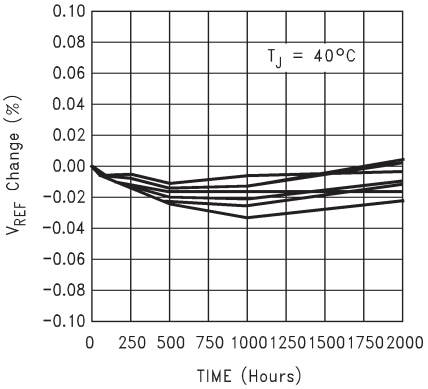

00922650

Accelerated Reference Voltage Drift vs Time

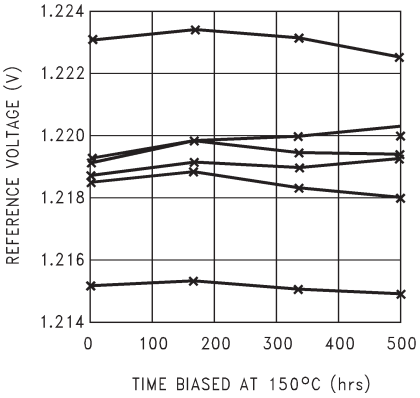

00922651

Reference Voltage vs Current and Temperature

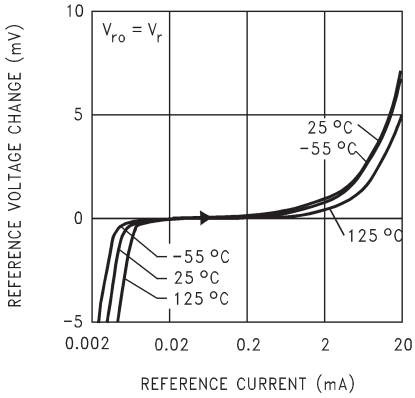

00922652

Reference Voltage vs Current and Temperature

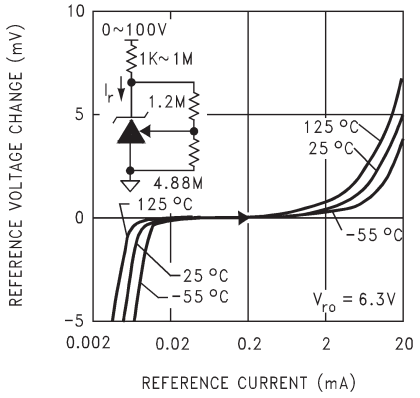

00922653

Reference Voltage vs Reference Current

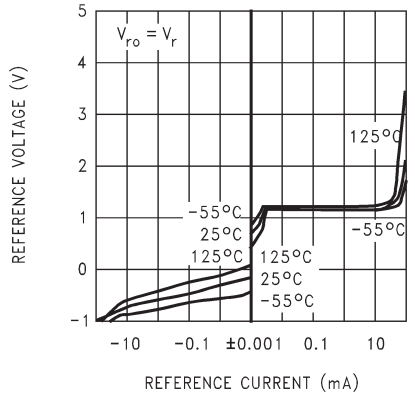

00922654

Typical Performance Characteristics (Reference) T_J = 25˚C, FEEDBACK pin shorted to V^- = 0V, unless otherwise noted (Continued)

Reference Voltage vs Reference Current

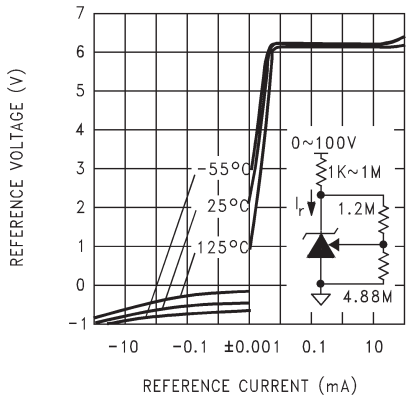

00922655

Reference AC Stability Range

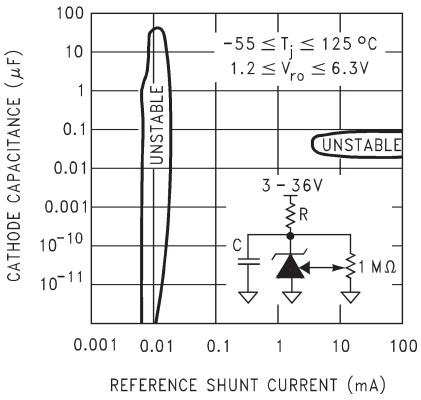

00922656

FEEDBACK Current vs FEEDBACK-to-Anode Voltage

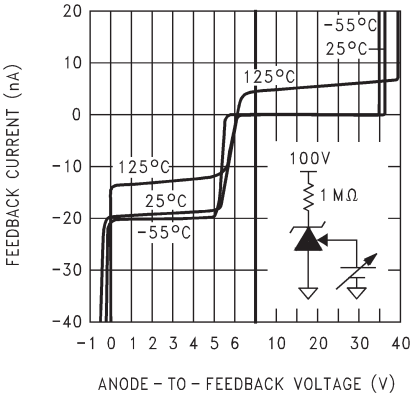

00922657

FEEDBACK Current vs FEEDBACK-to-Anode Voltage

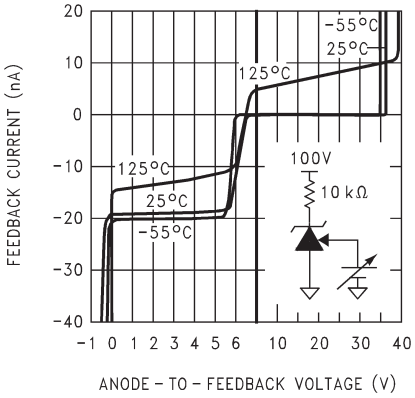

00922658

Reference Noise Voltage vs Frequency

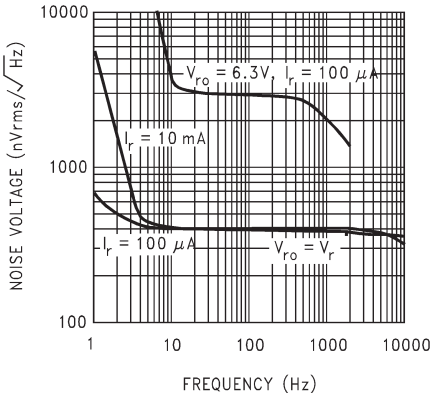

00922659

Reference Small-Signal Resistance vs Frequency

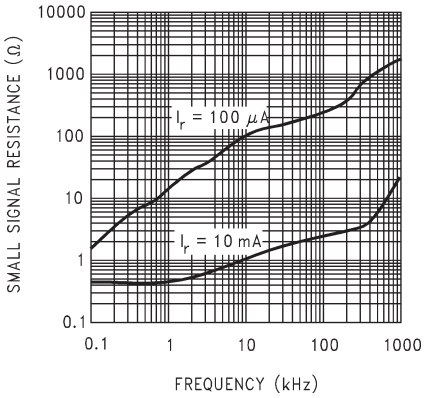

00922660

Typical Performance Characteristics (Reference) T_J = 25˚C, FEEDBACK pin shorted to V^- = 0V, unless otherwise noted (Continued)

Reference Power-Up Time

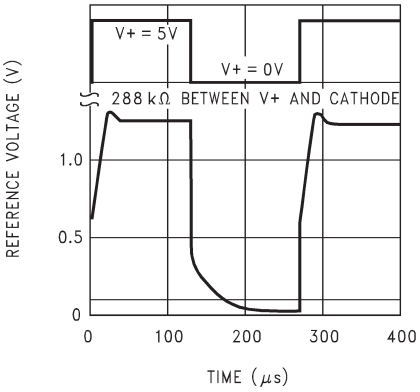

00922661

Reference Voltage with FEEDBACK Voltage Step

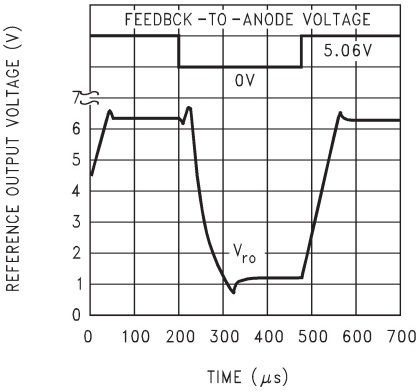

00922662

Reference Voltage with 100 ~ 12 μA Current Step

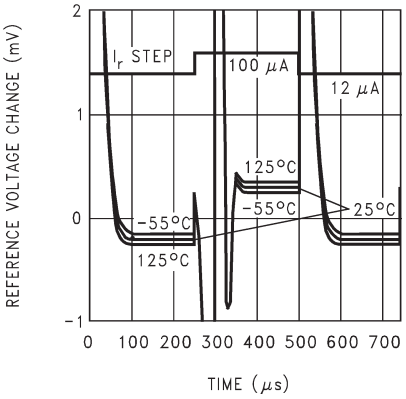

00922663

Reference Step Response for 100 μA ~ 10 mA Current Step

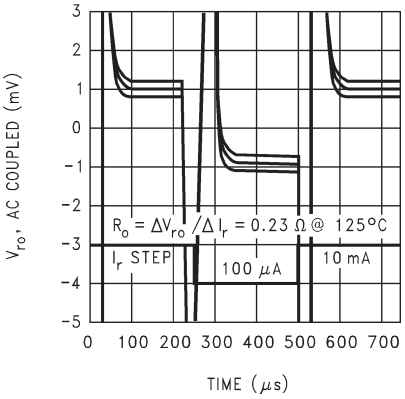

00922664

Reference Voltage Change with Supply Voltage Step

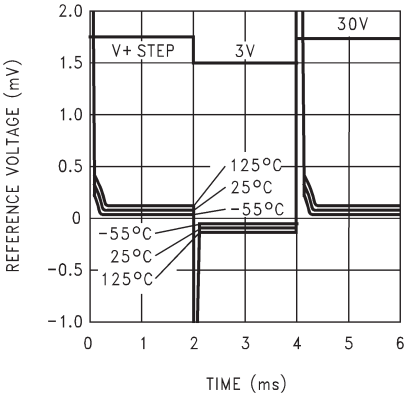

00922665

Reference Change vs Common-Mode Voltage

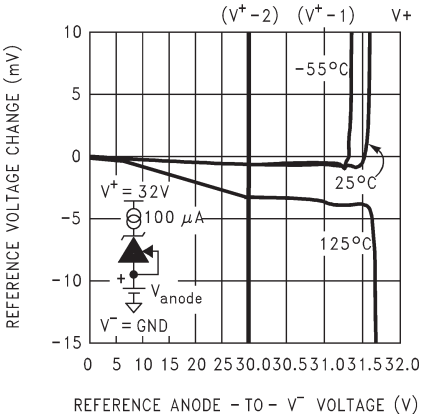

00922666

Typical Performance Characteristics (Op Amps)

$V^+ = 5V$, $V^- = GND = 0V$, $V_{CM} = V^+/2$, $V_{OUT} = V^+/2$, $T_J =$ 25˚C, unless otherwise noted

Input Common-Mode Voltage Range vs Temperature

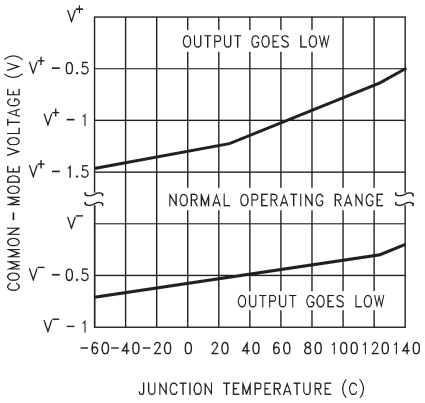

00922667

V_{OS} vs Junction Temperature

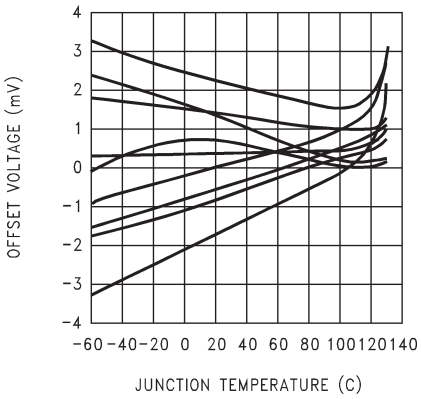

00922668

Input Bias Current vs Common-Mode Voltage

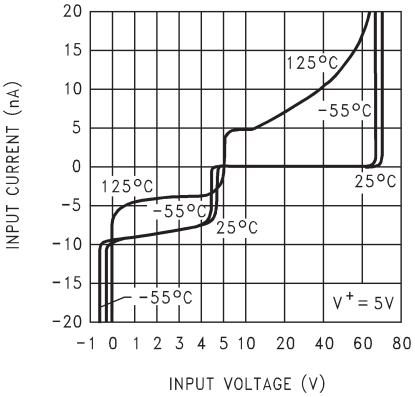

00922669

Large-Signal Step Response

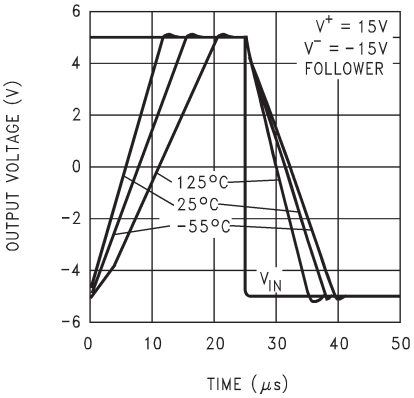

00922670

Output Voltage Swing vs Temp. and Current

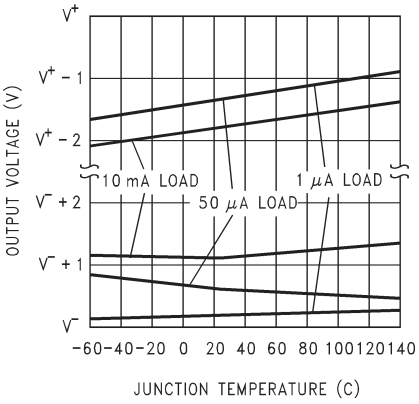

00922671

Output Source Current vs Output Voltage and Temp.

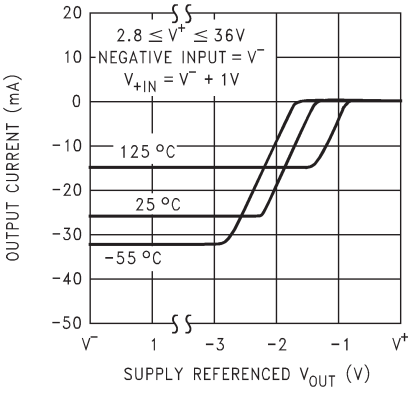

00922672

Typical Performance Characteristics (Op Amps) $V^+ = 5V$, $V^- = GND = 0V$, $V_{CM} = V^+/2$, $V_{OUT} = V^+/2$, $T_J = 25^\circ C$, unless otherwise noted (Continued)

Output Sink Current vs Output Voltage

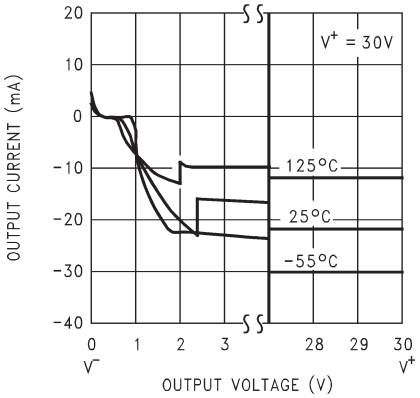

00922673

Output Swing, Large Signal

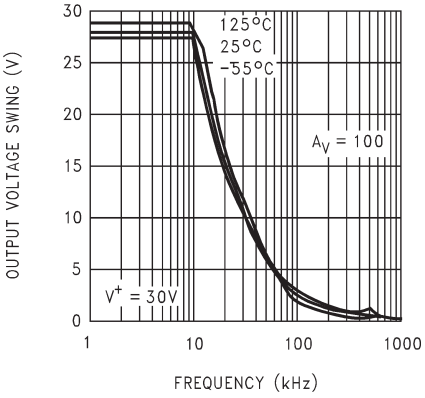

00922674

Output Impedance vs Frequency and Gain

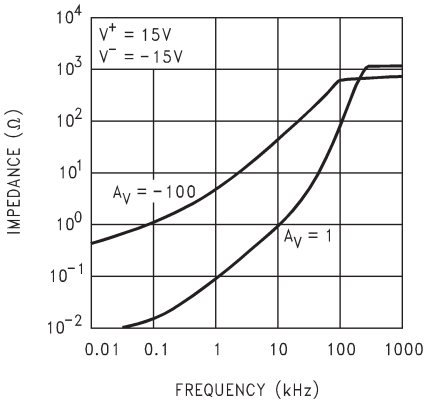

00922675

Small Signal Pulse Response vs Temp.

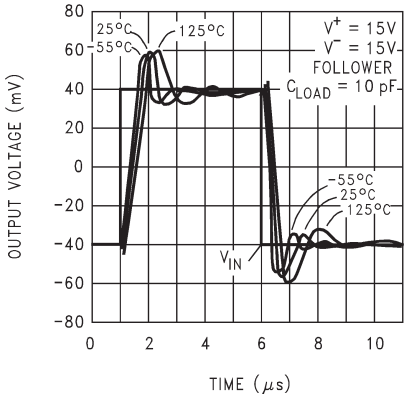

00922676

Small-Signal Pulse Response vs Load

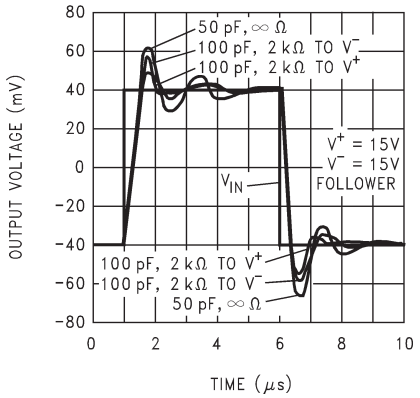

00922677

Op Amp Voltage Noise vs Frequency

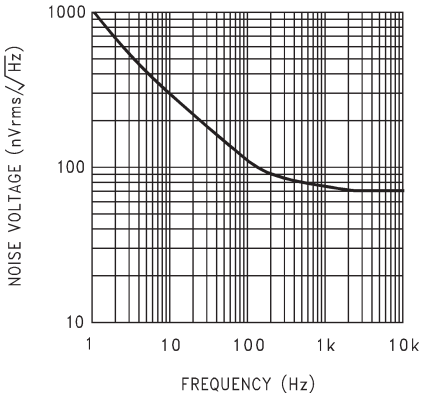

00922678

Typical Performance Characteristics (Op Amps) $V^+ = 5V$, $V^- = GND = 0V$, $V_{CM} = V^+/2$, $V_{OUT} = V^+/2$, $T_J = 25^\circ C$, unless otherwise noted (Continued)

Op Amp Current Noise vs Frequency

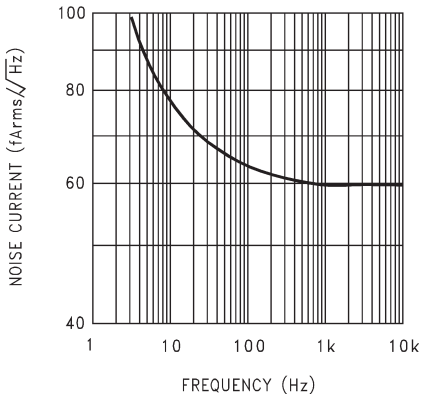

00922679

Small-Signal Voltage Gain vs Frequency and Temperature

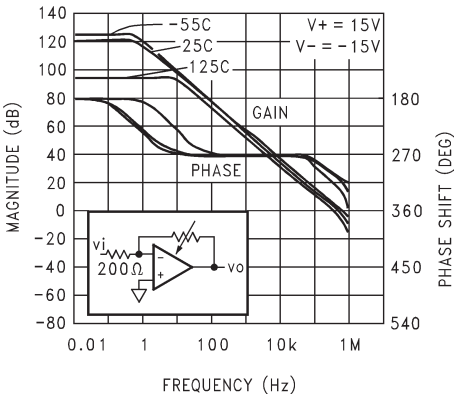

00922680

Small-Signal Voltage Gain vs Frequency and Load

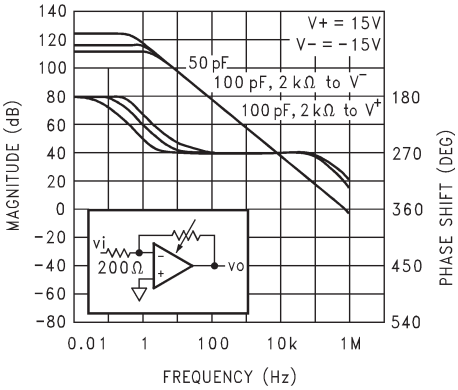

00922681

Follower Small-Signal Frequency Response

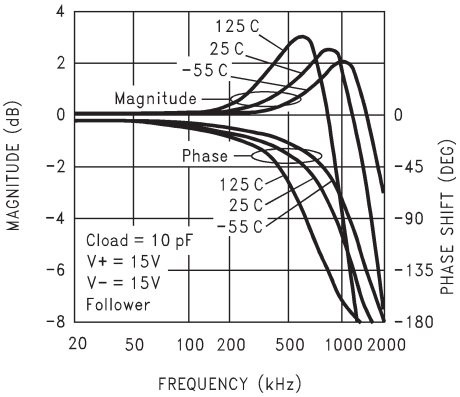

00922682

Common-Mode Input Voltage Rejection Ratio

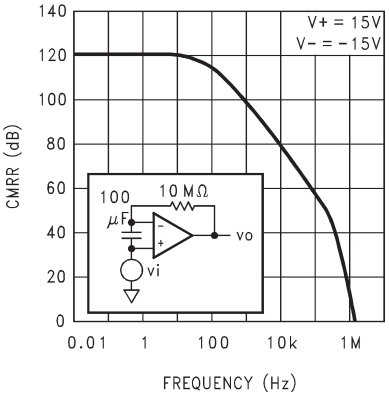

00922683

Power Supply Current vs Power Supply Voltage

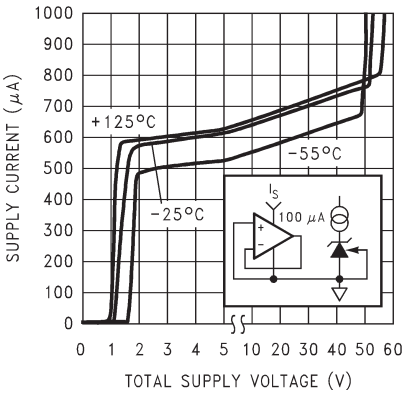

00922684

Typical Performance Characteristics (Op Amps) $V^+ = 5V$, $V^- = GND = 0V$, $V_{CM} = V^+/2$, $V_{OUT} = V^+/2$, $T_J = 25^\circ C$, unless otherwise noted (Continued)

Positive Power Supply Voltage Rejection Ratio

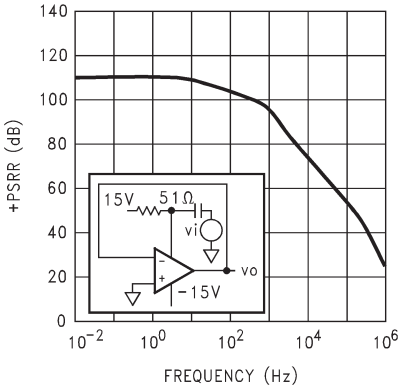

00922685

Negative Power Supply Voltage Rejection Ratio

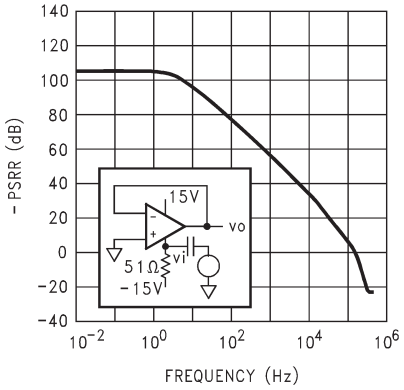

00922686

Slew Rate vs Temperature

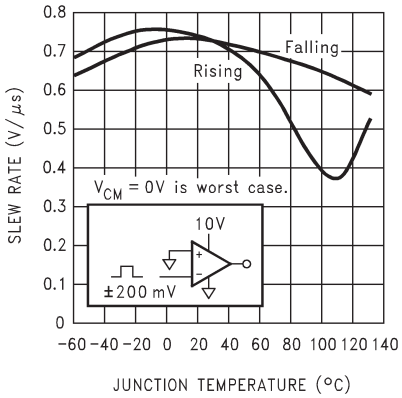

00922687

Input Offset Current vs Junction Temperature

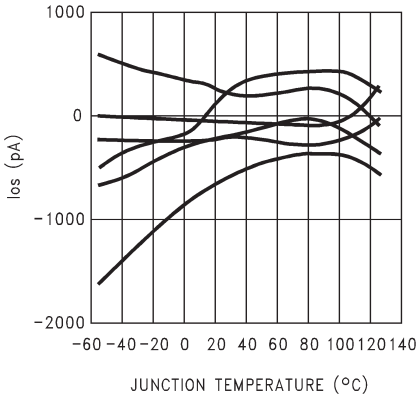

00922688

Input Bias Current vs Junction Temperature

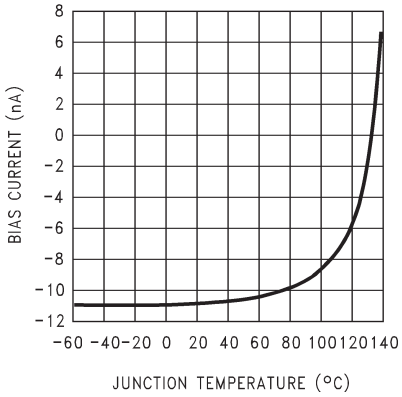

00922689

Typical Performance Characteristics (Comparators)

Output Sink Current

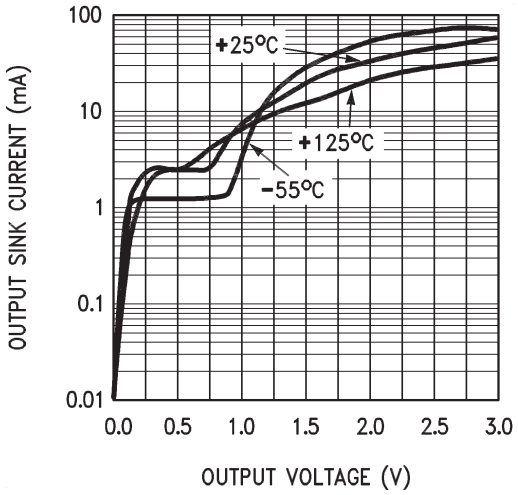

00922610

Input Bias Current vs Common-Mode Voltage

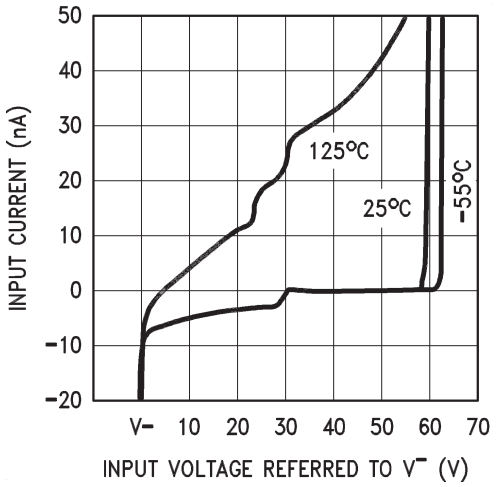

00922611

Comparator Response Times—Inverting Input, Positive Transition

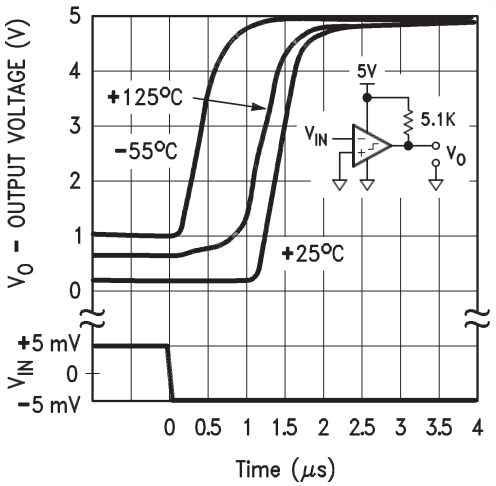

00922612

Comparator Response Times—Inverting Input, Negative Transition

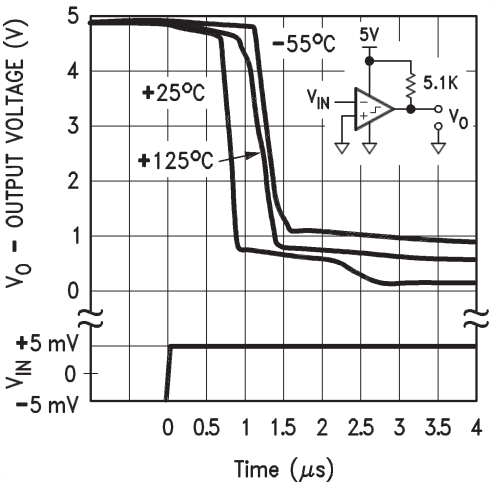

00922613

Typical Performance Characteristics (Comparators) (Continued)

Comparator Response Times — Non-Inverting Input, Positive Transition

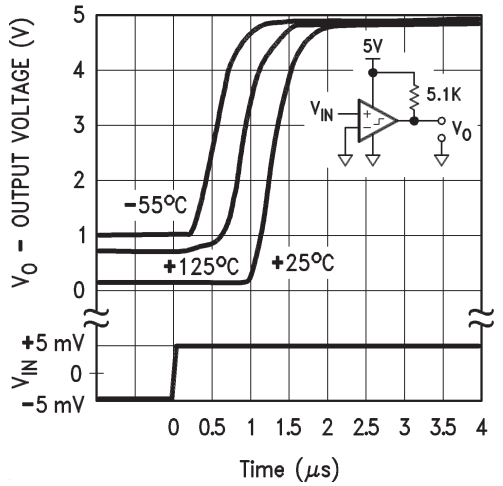

00922614

Comparator Response Times — Non-Inverting Input, Negative Transition

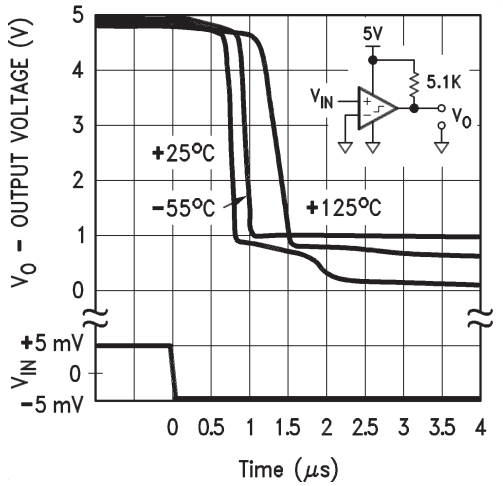

00922615

Comparator Response Times — Inverting Input, Positive Transition

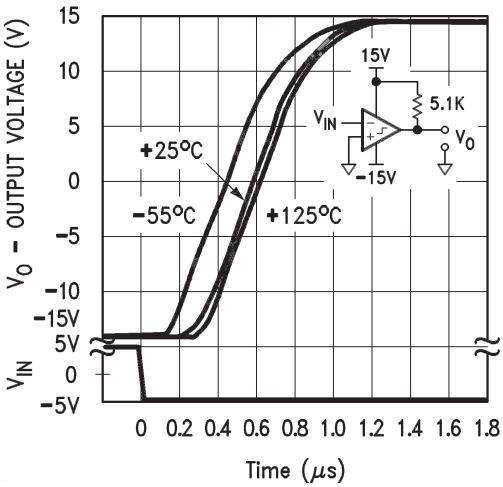

00922616

Comparator Response Times — Inverting Input, Negative Transition

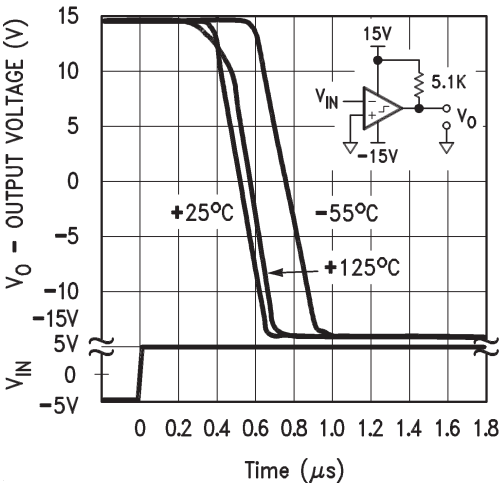

00922617

Typical Performance Characteristics (Comparators) (Continued)

Comparator Response Times — Non-Inverting Input, Positive Transition

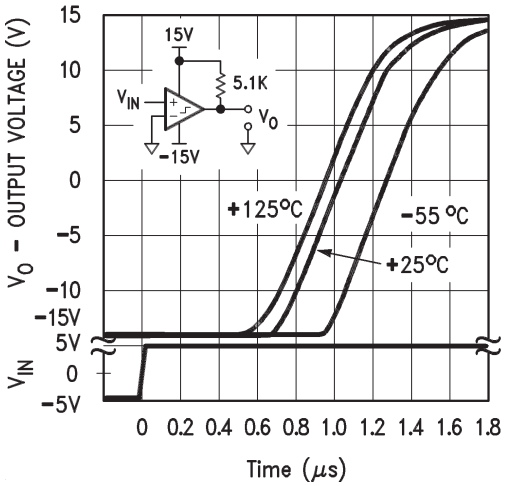

00922618

Comparator Response Times — Non-Inverting Input, Negative Transition

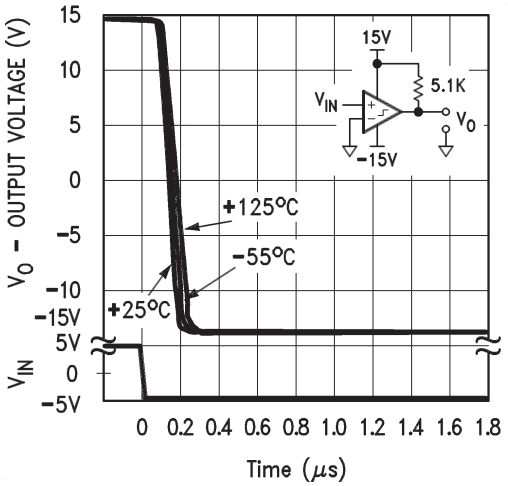

00922619

Typical Performance Distributions

Average V_{OS} Drift Military Temperature Range

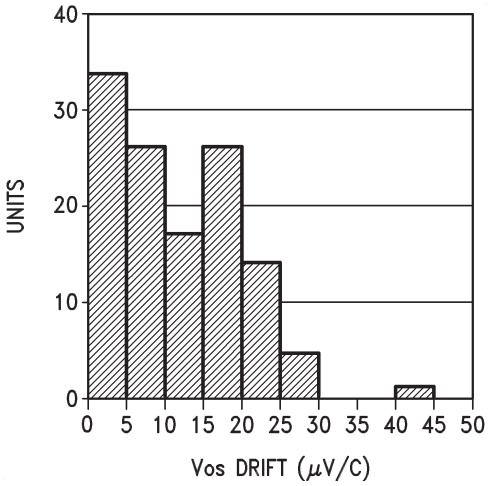

00922620

Average V_{OS} Drift Industrial Temperature Range

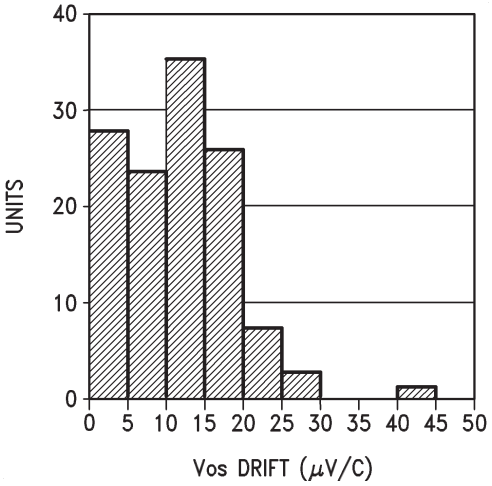

00922621

Typical Performance Distributions (Continued)

Average V_{OS} Drift
Commercial Temperature Range

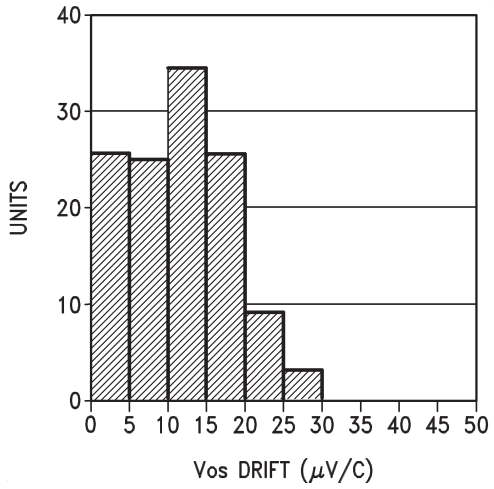

00922622

Average I_{OS} Drift
Military Temperature Range

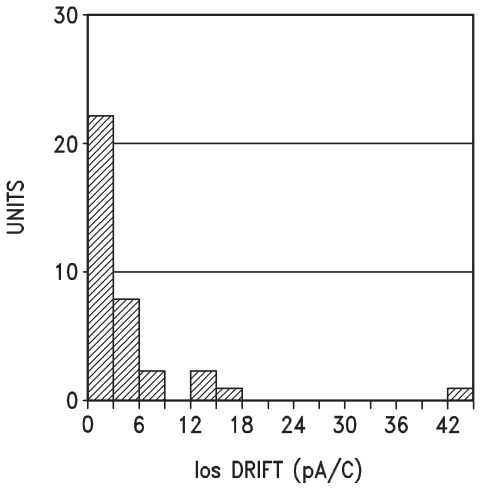

00922623

Average I_{OS} Drift
Industrial Temperature Range

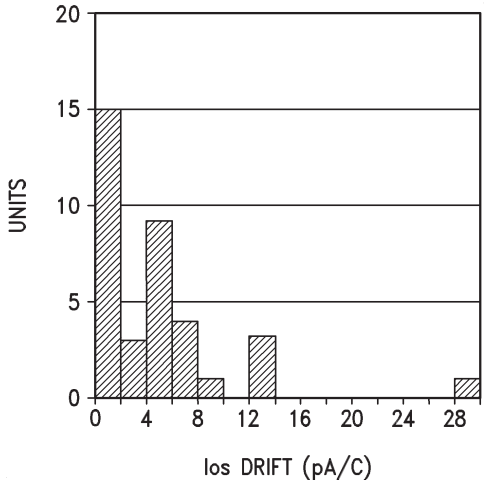

00922624

Op Amp Voltage
Noise Distribution

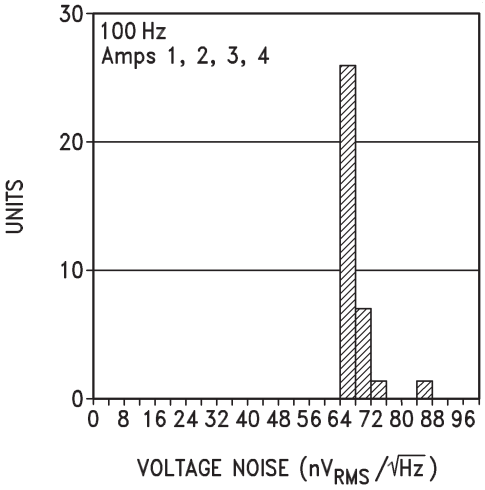

00922627

Typical Performance Distributions (Continued)

Average I_{OS} Drift Commercial Temperature Range

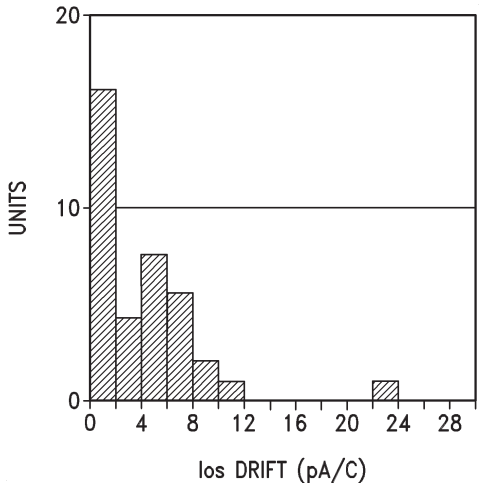

00922625

Op Amp Current Noise Distribution

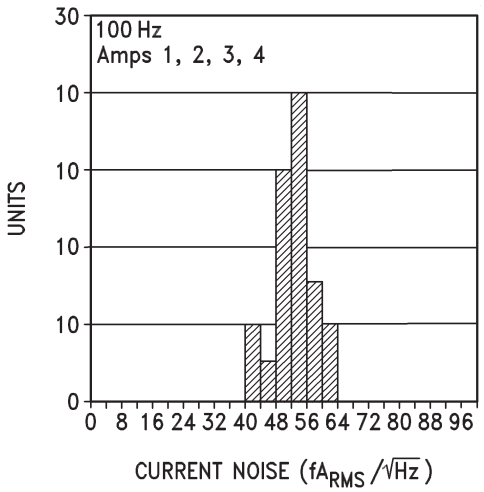

00922628

Voltage Reference Broad-Band Noise Distribution

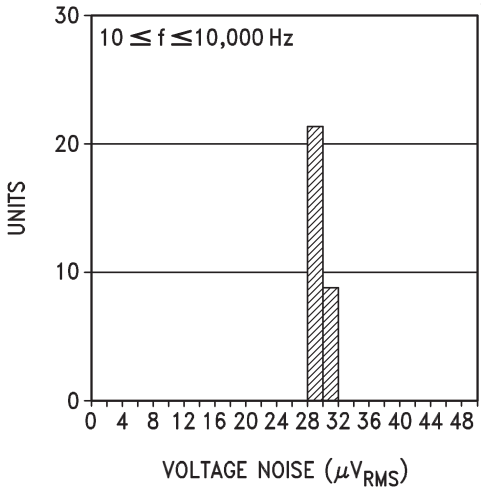

00922626

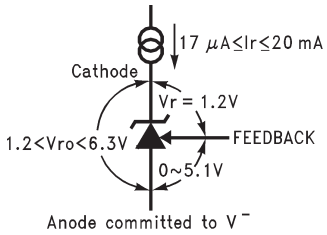

00922629

FIGURE 1. Voltage Associated with Reference (current source I_r is external)

The reference equivalent circuit reveals how V_r is held at the constant 1.2V by feedback, and how the FEEDBACK pin passes little current.

To generate the required reverse current, typically a resistor is connected from a supply voltage higher than the reference voltage. Varying that voltage, and so varying I_r, has small effect with the equivalent series resistance of less than an ohm at the higher currents. Alternatively, an active current source, such as the LM134 series, may generate I_r.

Application Information

VOLTAGE REFERENCE

Reference Biasing

The voltage reference is of a shunt regulator topology that models as a simple zener diode. With current I_r flowing in the "forward" direction there is the familiar diode transfer function. I_r flowing in the reverse direction forces the reference voltage to be developed from cathode to anode. The cathode may swing from a diode drop below V^- to the reference voltage or to the avalanche voltage of the parallel protection diode, nominally 7V. A 6.3V reference with V^+ = 3V is allowed.

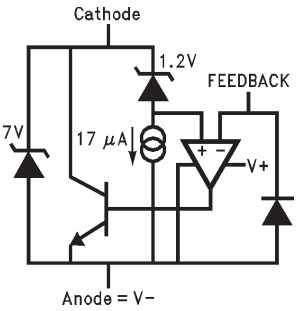

00922630

FIGURE 2. Reference Equivalent Circuit

Application Information (Continued)

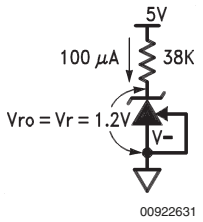

FIGURE 3. 1.2V Reference

Capacitors in parallel with the reference are allowed. See the Reference AC Stability Range typical curve for capacitance values—from 20 μA to 3 mA any capacitor value is stable. With the reference's wide stability range with resistive and capacitive loads, a wide range of RC filter values will perform noise filtering.

Adjustable Reference

The FEEDBACK pin allows the reference output voltage, V_{ro}, to vary from 1.24V to 6.3V. The reference attempts to hold V_r at 1.24V. If V_r is above 1.24V, the reference will conduct current from Cathode to Anode; FEEDBACK current always remains low. If FEEDBACK is connected to Anode, then $V_{ro} = V_r = 1.24V$. For higher voltages FEEDBACK is held at a constant voltage above Anode—say 3.76V for $V_{ro} = 5V$. Connecting a resistor across the constant V_r generates a current $I=R1/V_r$ flowing from Cathode into FEEDBACK node. A Thevenin equivalent 3.76V is generated from FEEDBACK to Anode with R2=3.76/I. Keep I greater than one thousand times larger than FEEDBACK bias current for <0.1% error—I≥32 μA for the military grade over the military temperature range (I≥5.5 μA for a 1% untrimmed error for a commercial part).

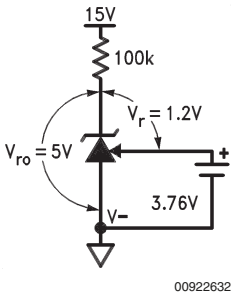

FIGURE 4. Thevenin Equivalent of Reference with 5V Output

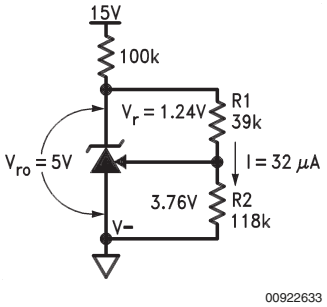

R1 = Vr/I = 1.24/32μ = 39k

R2 = R1 {(Vro/Vr) − 1} = 39k {(5/1.24) − 1)} = 118k

FIGURE 5. Resistors R1 and R2 Program Reference Output Voltage to be 5V

Understanding that V_r is fixed and that voltage sources, resistors, and capacitors may be tied to the FEEDBACK pin, a range of V_r temperature coefficients may be synthesized.

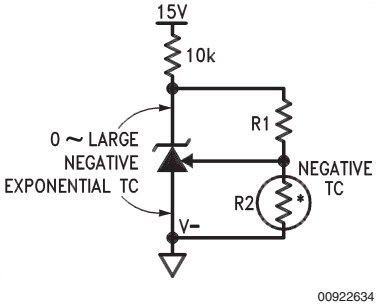

FIGURE 6. Output Voltage has Negative Temperature Coefficient (TC) if R2 has Negative TC

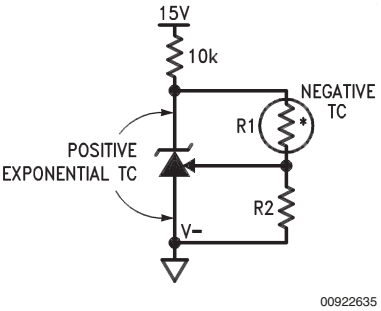

FIGURE 7. Output Voltage has Positive TC if R1 has Negative TC

Application Information (Continued)

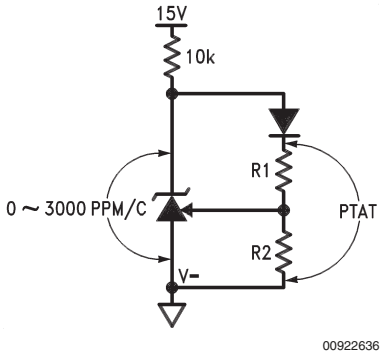

FIGURE 8. Diode in Series with R1 Causes Voltage Across R1 and R2 to be Proportional to Absolute Temperature (PTAT)

Connecting a resistor across Cathode-to-FEEDBACK creates a 0 TC current source, but a range of TCs may be synthesized.

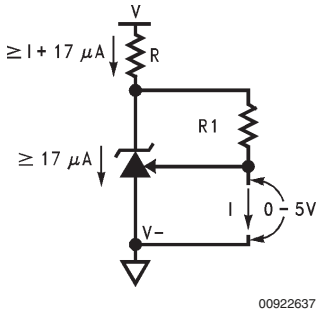

I = Vr/R1 = 1.24/R1

FIGURE 9. Current Source is Programmed by R1

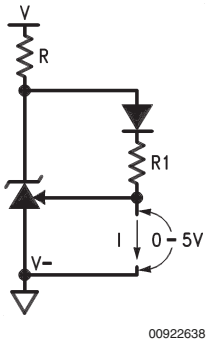

FIGURE 10. Proportional-to-Absolute-Temperature Current Source

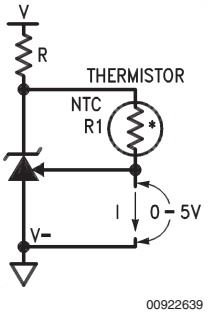

FIGURE 11. Negative-TC Current Source

Reference Hysteresis

The reference voltage depends, slightly, on the thermal history of the die. Competitive micro-power products vary—always check the data sheet for any given device. Do not assume that no specification means no hysteresis.

OPERATIONAL AMPLIFIERS AND COMPARATORS

Any amp, comparator, or the reference may be biased in any way with no effect on the other sections of the LM613, except when a substrate diode conducts, see Electrical Characteristics (Note 1). For example, one amp input may be outside the common-mode range, another amp may be operating as a comparator, and all other sections may have all terminals floating with no effect on the others. Tying inverting input to output and non-inverting input to V^- on unused amps is preferred. Unused comparators should have non-inverting input and output tied to V^+, and inverting input tied to V^-. Choosing operating points that cause oscillation, such as driving too large a capacitive load, is best avoided.

Op Amp Output Stage

These op amps, like the LM124 series, have flexible and relatively wide-swing output stages. There are simple rules to optimize output swing, reduce cross-over distortion, and optimize capacitive drive capability:

1. Output Swing: Unloaded, the 42 μA pull-down will bring the output within 300 mV of V^- over the military temperature range. If more than 42 μA is required, a resistor from output to V^- will help. Swing across any load may be improved slightly if the load can be tied to V^+, at the cost of poorer sinking open-loop voltage gain.
2. Cross-Over Distortion: The LM613 has lower cross-over distortion (a 1 V_{BE} deadband versus 3 V_{BE} for the LM124), and increased slew rate as shown in the characteristic curves. A resistor pull-up or pull-down will force class-A operation with only the PNP or NPN output transistor conducting, eliminating cross-over distortion.
3. Capacitive Drive: Limited by the output pole caused by the output resistance driving capacitive loads, a pull-down resistor conducting 1 mA or more reduces the output stage NPN r_e until the output resistance is that of the current limit 25Ω. 200 pF may then be driven without oscillation.

Application Information (Continued)

Comparator Output Stage

The comparators, like the LM139 series, have open-collector output stages. A pull-up resistor must be added from each output pin to a positive voltage for the output transistor to switch properly. When the output transistor is OFF, the output voltage will be this external positive voltage.

For the output voltage to be under the TTL-low voltage threshold when the output transistor is ON, the output current must be less than 8 mA (over temperature). This impacts the minimum value of pull-up resistor.

The offset voltage may increase when the output voltage is low and the output current is less than 30 μA. Thus, for best accuracy, the pull-up resistor value should be low enough to allow the output transistor to sink more than 30 μA.

Op Amp and Comparator Input Stage

The lateral PNP input transistors, unlike those of most op amps, have BV_{EBO} equal to the absolute maximum supply voltage. Also, they have no diode clamps to the positive supply nor across the inputs. These features make the inputs look like high impedances to input sources producing large differential and common-mode voltages.

Typical Applications

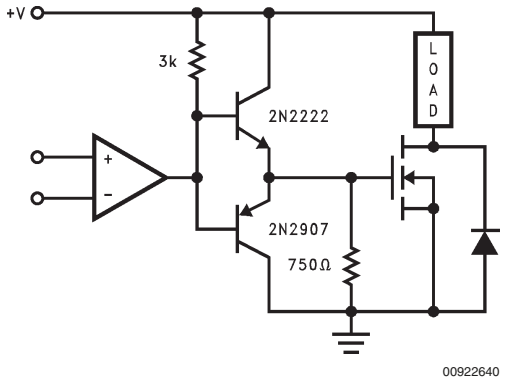

FIGURE 12. High Current, High Voltage Switch

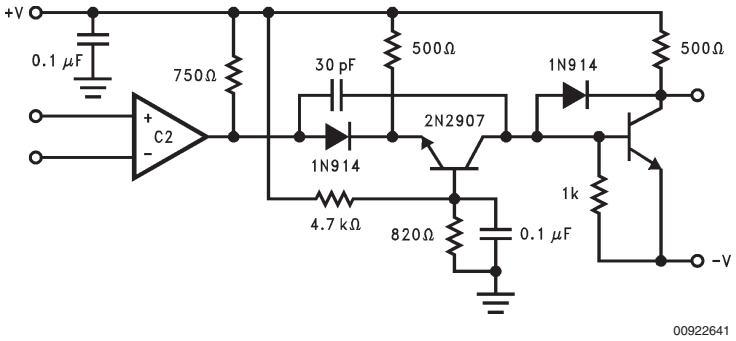

FIGURE 13. High Speed Level Shifter. Response time is approximately 1.5 μs, where output is either approximately +V or −V.

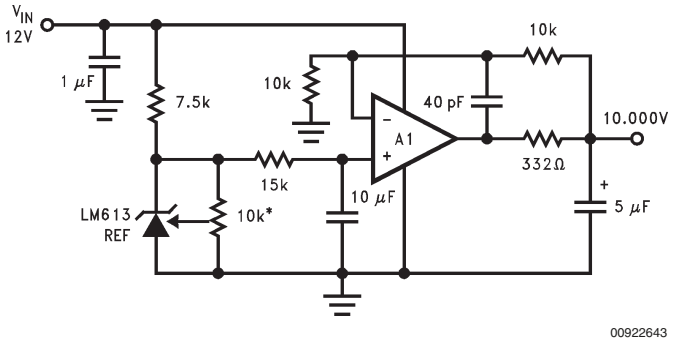

*10k must be low
t.c. trimpot

FIGURE 14. Ultra Low Noise, 10.00V Reference. Total output noise is typically 14 μV_{RMS}.

Typical Applications (Continued)

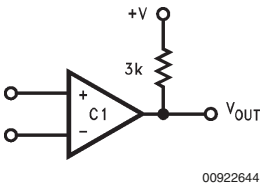

FIGURE 15. Basic Comparator

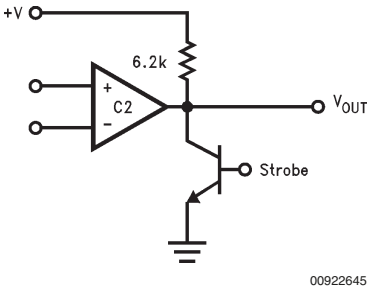

FIGURE 16. Basic Comparator with External Strobe

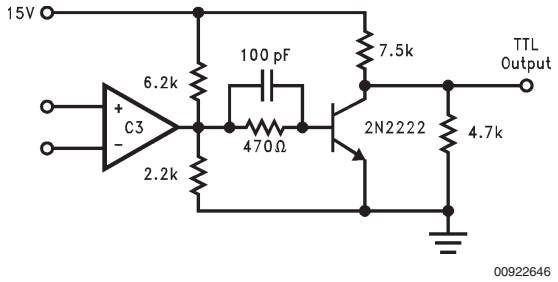

FIGURE 17. Wide-Input Range Comparator with TTL Output

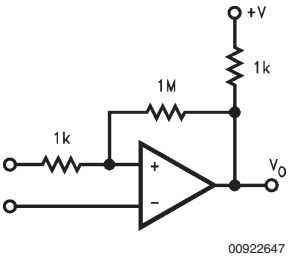

FIGURE 18. Comparator with Hysteresis ($\Delta V_H = {}^{+}V(1k/1M)$)

Ordering Information

Reference Tolerance & V_{OS}	Temperature Range		Package	NSC Drawing
	Military $-55^{\circ}C \le T_A \le +125^{\circ}C$	Industrial $-40^{\circ}C \le T_A \le +85^{\circ}C$		
±0.6% 80 ppm/˚C Max. $V_{OS} \le 3.5$ mV	LM613AMJ/883 (Note 14)		16-Pin Ceramic DIP	J16A
±2.0% 150 ppm/˚C Max. $V_{OS} \le 5.0$ mV Max.		LM613IWM LM613IWMX	16-Pin Wide Surface Mount	M16B

Note 14: A military RETS 613AMX electrical test specification is available on request. The Military screened parts can also be procured as a Standard Military Drawing.

Physical Dimensions inches (millimeters)

unless otherwise noted

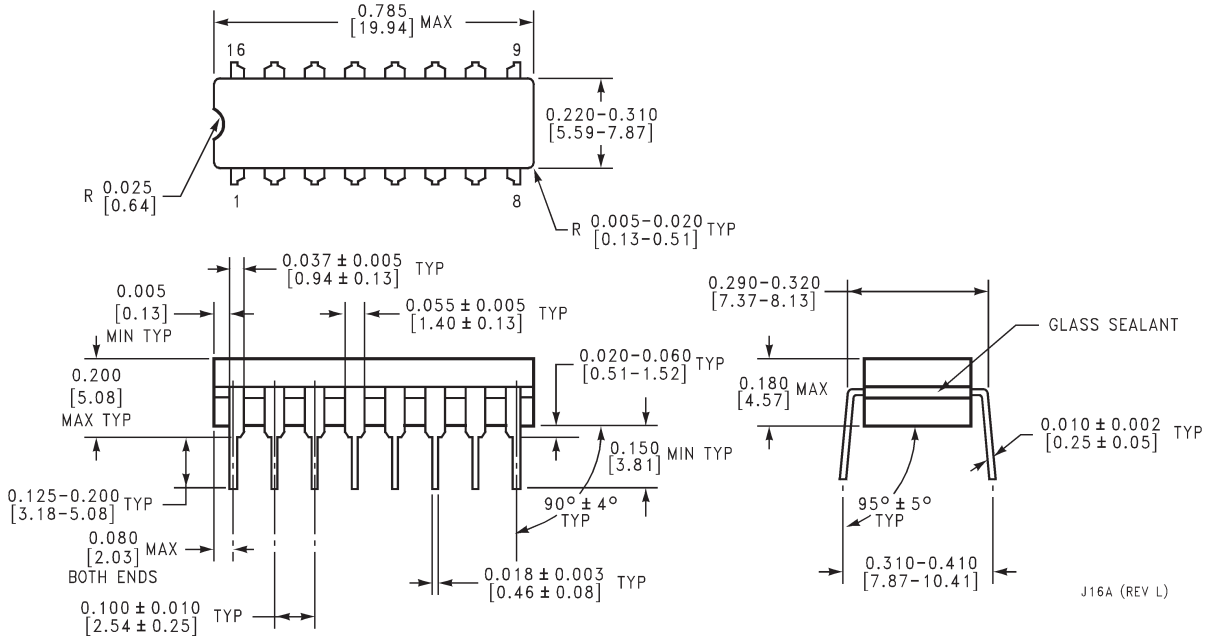

16-Lead Ceramic Dual-In-Line Package (J)
Order Number LM613AMJ/883
NS Package Number J16A

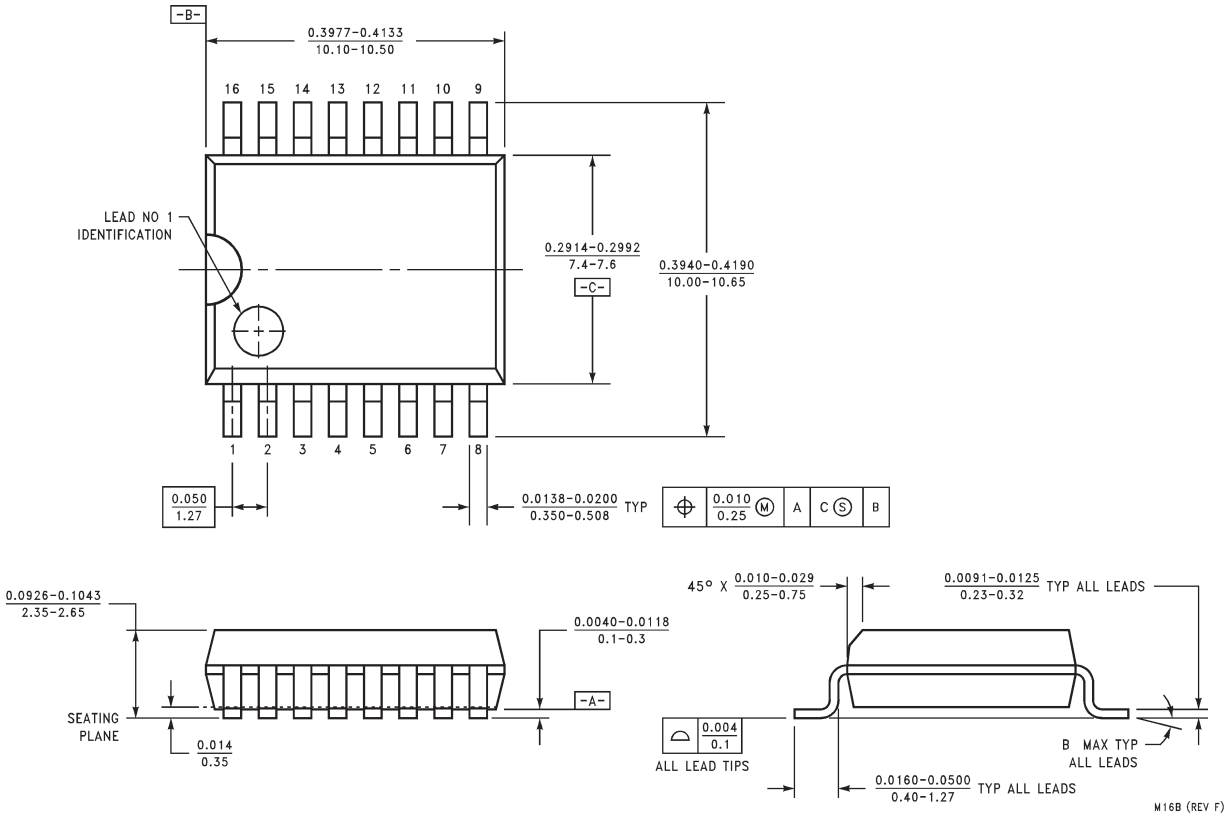

16-Lead Small Outline Package (WM)
Order Number LM613IWM or LM613IWMX
NS Package Number M16B

Notes

LIFE SUPPORT POLICY

NATIONAL'S PRODUCTS ARE NOT AUTHORIZED FOR USE AS CRITICAL COMPONENTS IN LIFE SUPPORT DEVICES OR SYSTEMS WITHOUT THE EXPRESS WRITTEN APPROVAL OF THE PRESIDENT AND GENERAL COUNSEL OF NATIONAL SEMICONDUCTOR CORPORATION. As used herein:

1. Life support devices or systems are devices or systems which, (a) are intended for surgical implant into the body, or (b) support or sustain life, and whose failure to perform when properly used in accordance with instructions for use provided in the labeling, can be reasonably expected to result in a significant injury to the user.
2. A critical component is any component of a life support device or system whose failure to perform can be reasonably expected to cause the failure of the life support device or system, or to affect its safety or effectiveness.

BANNED SUBSTANCE COMPLIANCE

National Semiconductor certifies that the products and packing materials meet the provisions of the Customer Products Stewardship Specification (CSP-9-111C2) and the Banned Substances and Materials of Interest Specification (CSP-9-111S2) and contain no ''Banned Substances'' as defined in CSP-9-111S2.

National Semiconductor
Americas Customer
Support Center
Email: new.feedback@nsc.com
Tel: 1-800-272-9959

www.national.com

National Semiconductor
Europe Customer Support Center
Fax: +49 (0) 180-530 85 86
Email: europe.support@nsc.com
Deutsch Tel: +49 (0) 69 9508 6208
English Tel: +44 (0) 870 24 0 2171
Français Tel: +33 (0) 1 41 91 8790

National Semiconductor
Asia Pacific Customer
Support Center
Email: ap.support@nsc.com

National Semiconductor
Japan Customer Support Center
Fax: 81-3-5639-7507
Email: jpn.feedback@nsc.com
Tel: 81-3-5639-7560

National does not assume any responsibility for use of any circuitry described, no circuit patent licenses are implied and National reserves the right at any time without notice to change said circuitry and specifications.